Broîl Kîng®

REDDI-BILT BARBECUES

Broîl Kîng

SOVEREIGN XL 90
9889-82
9889-83
9889-86

Onward Manufacturing Company Limited
Since 1906
585 Kumpf Drive
Waterloo, Ontario, Canada
N2V 1K3

10084-E64EU REV B 12/14

1	(4) 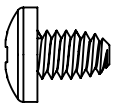 (4) 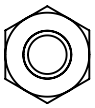

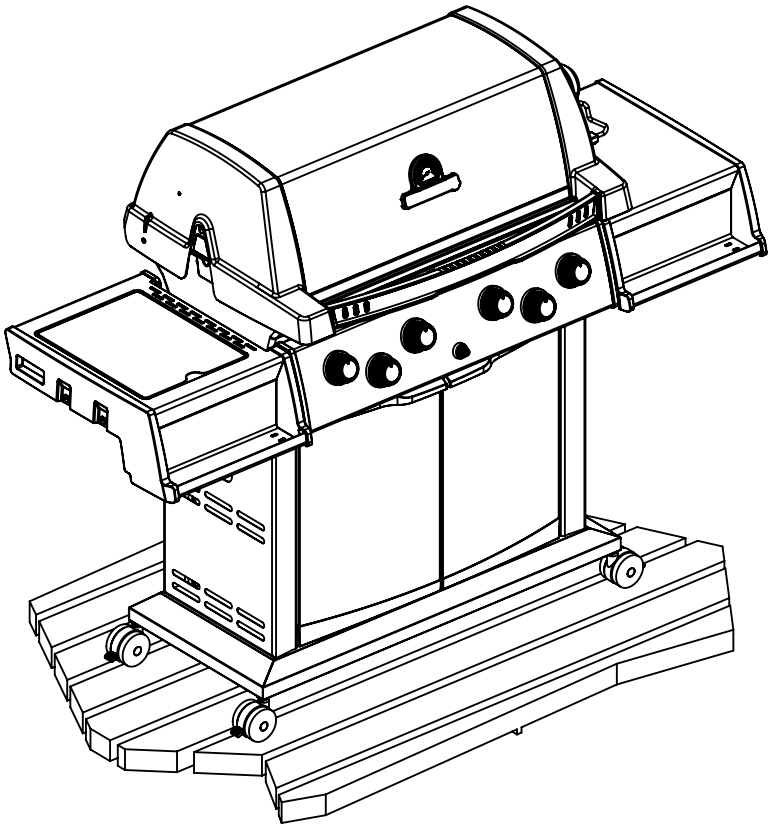

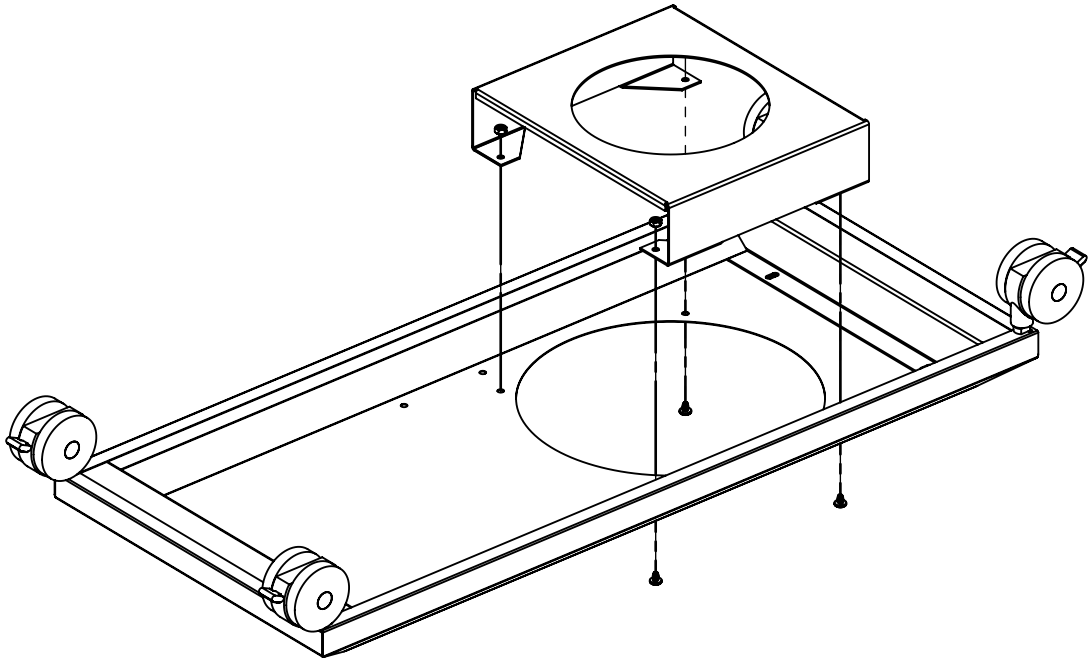

2

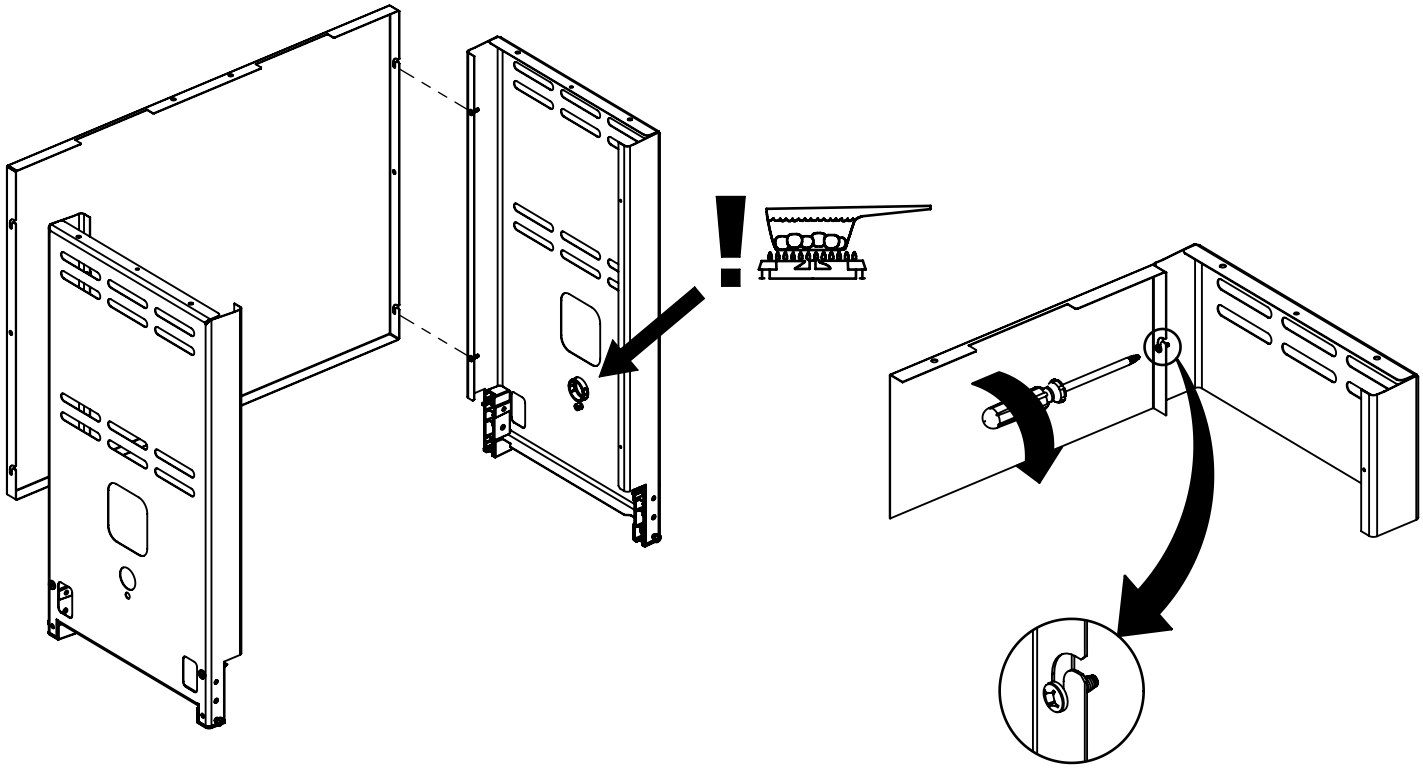

3

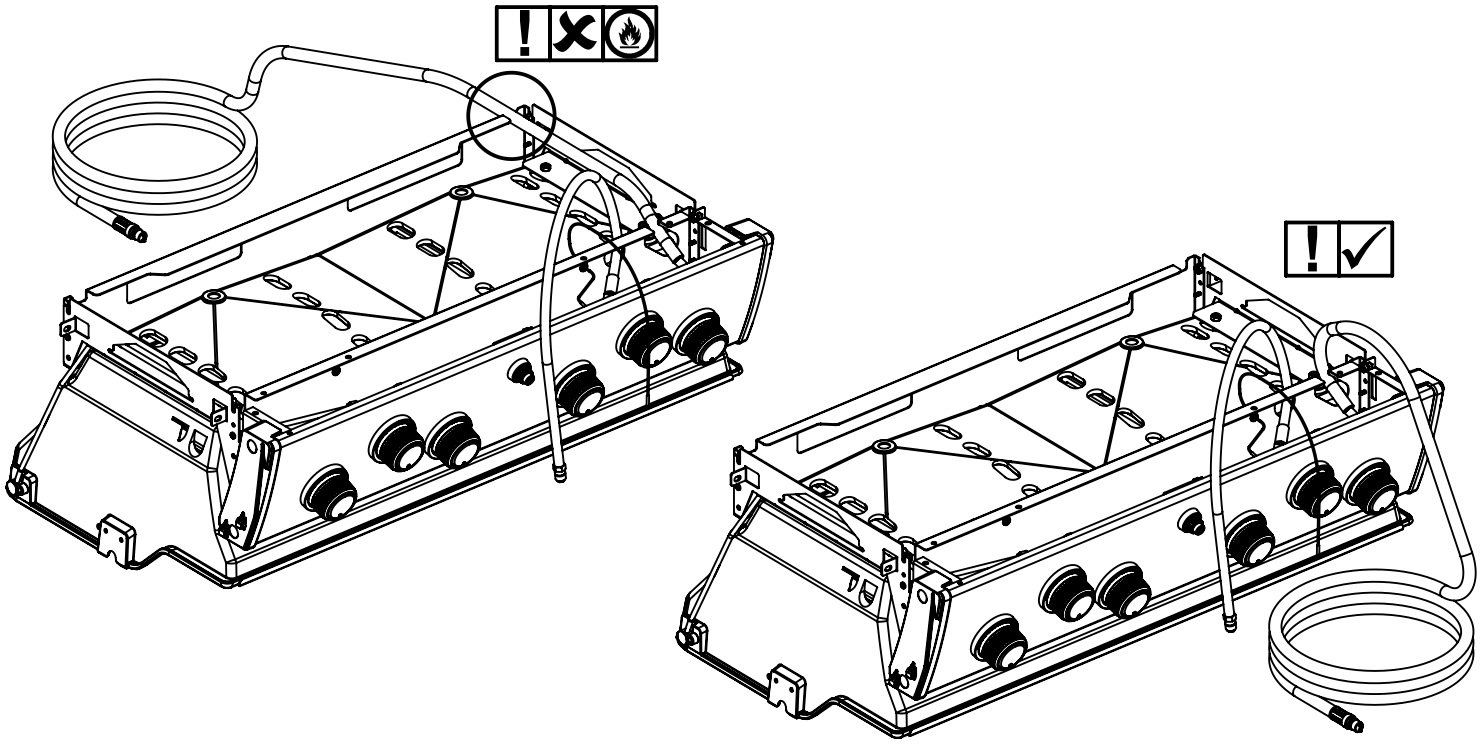

4	(4) 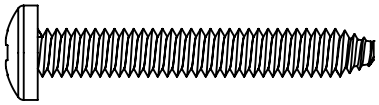 (8) 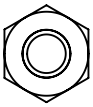

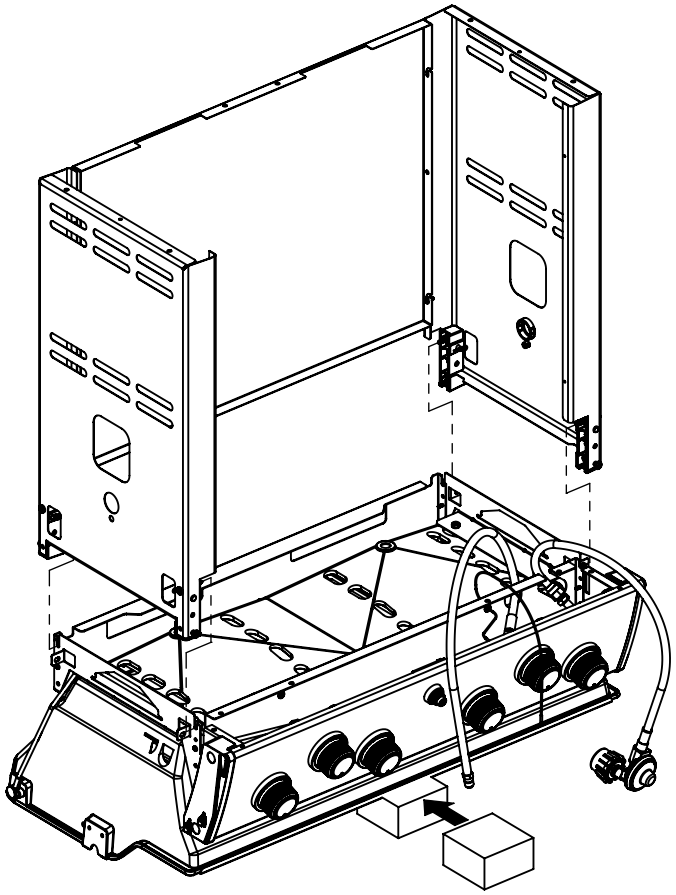

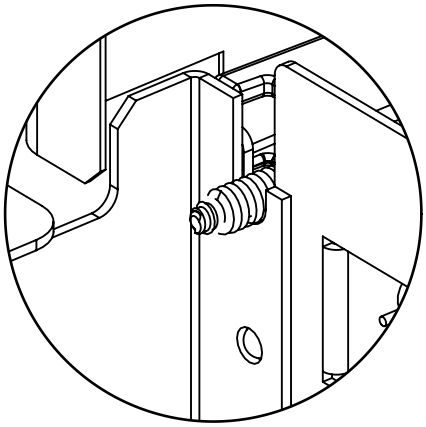

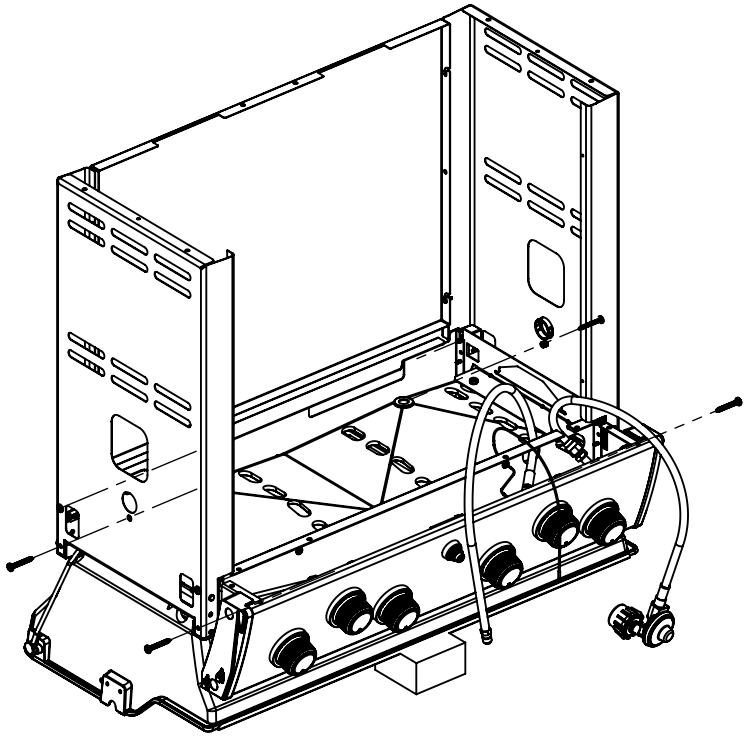

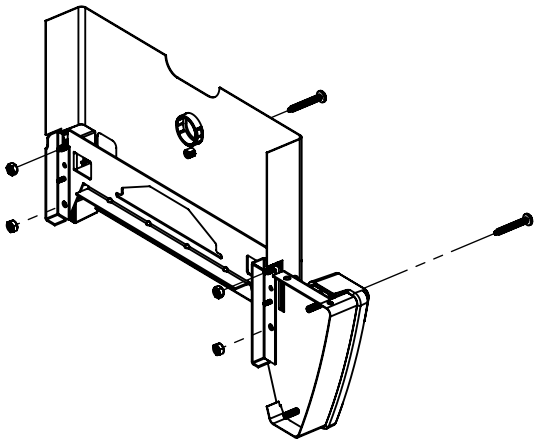

5	(2) 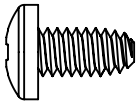 (2) 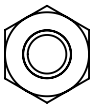 (1)

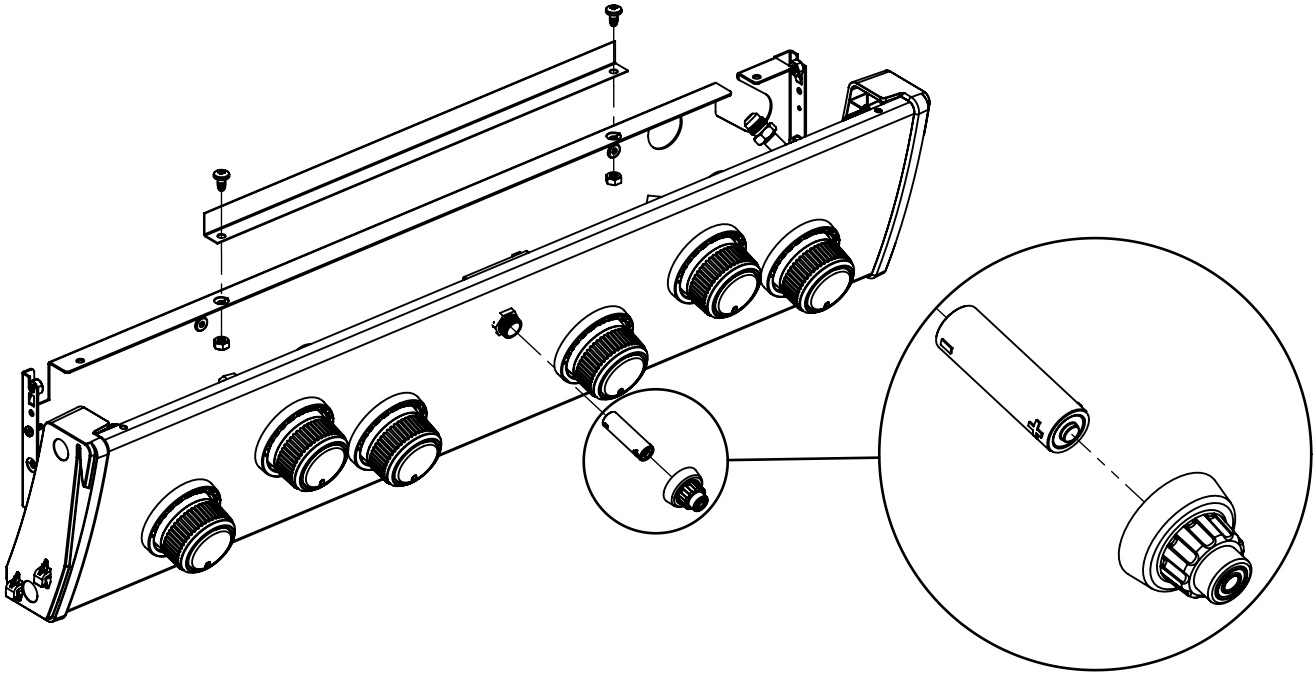

6	(2) 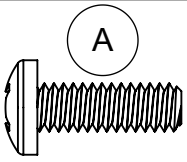 (4) 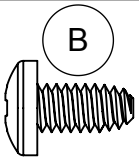 (6) 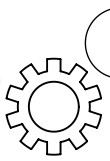 (2) 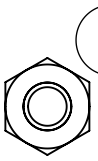

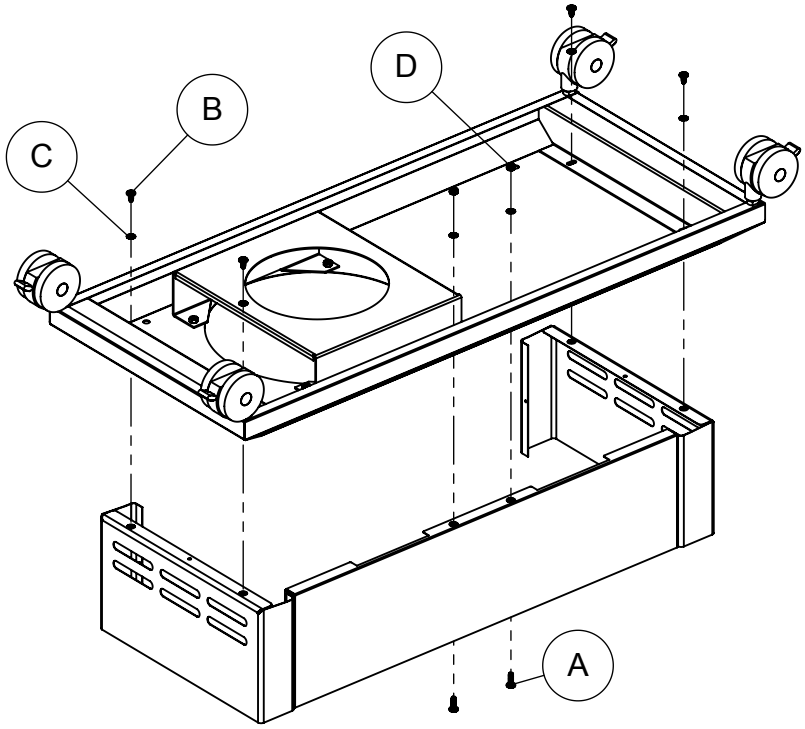

7	(2) 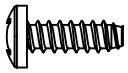 (2) 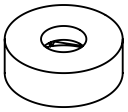

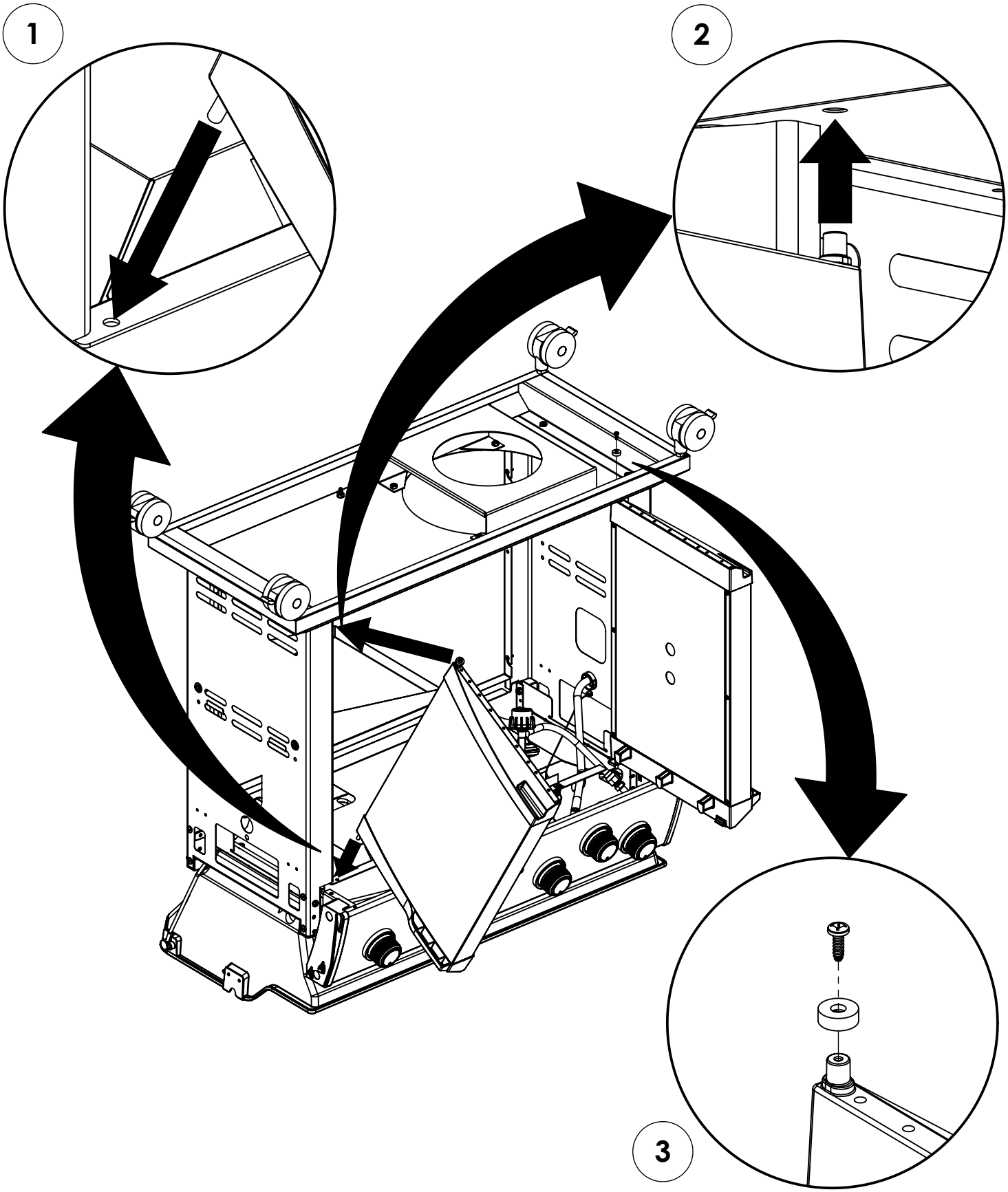

8	

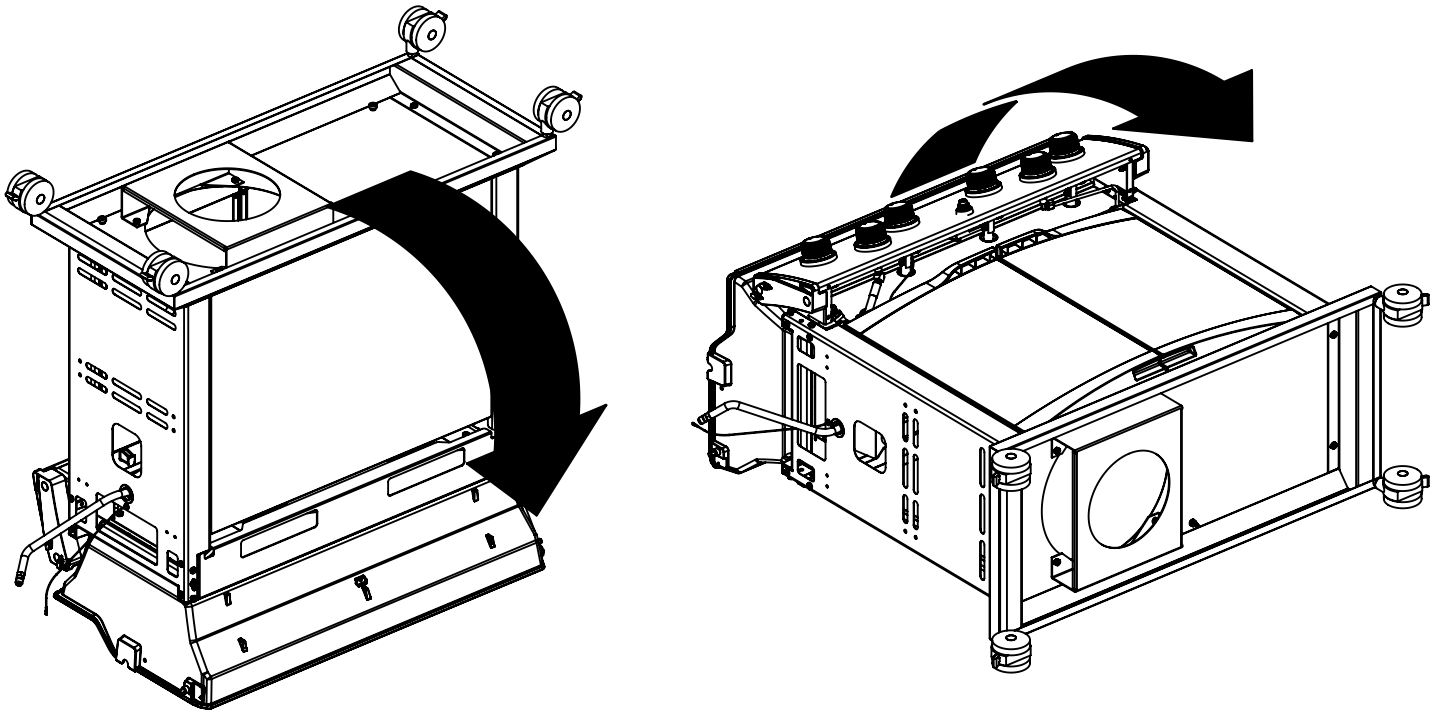

9	(2) 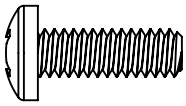 (2) 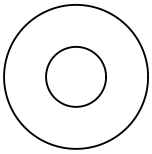 (2) 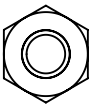

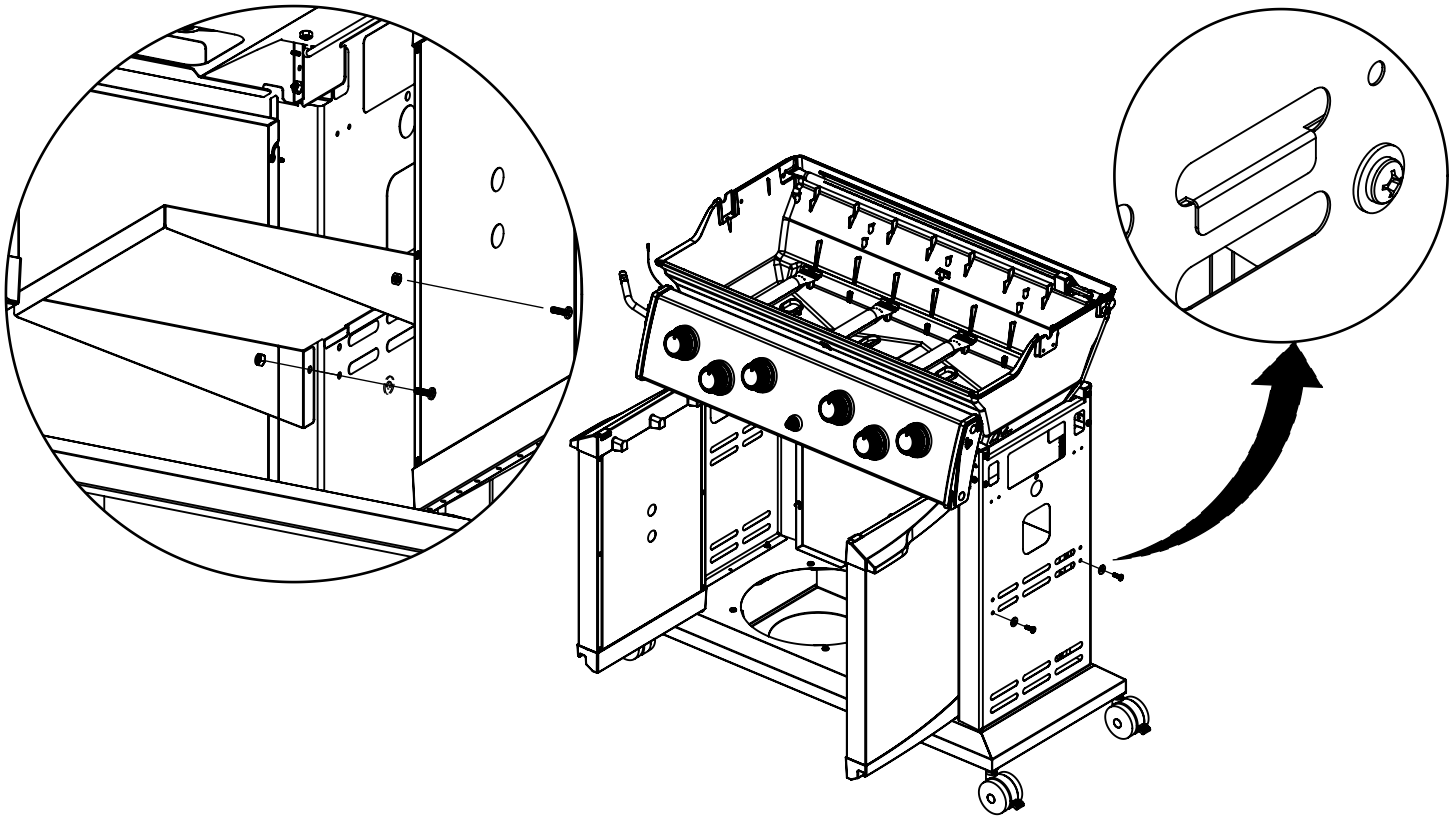

10	(1) 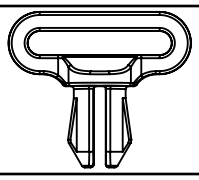

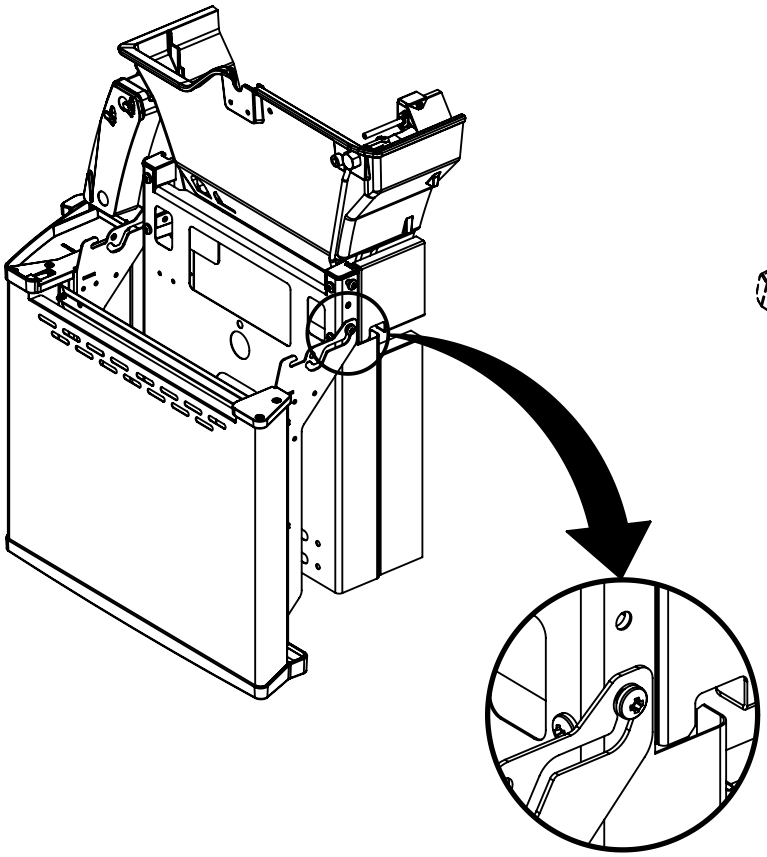

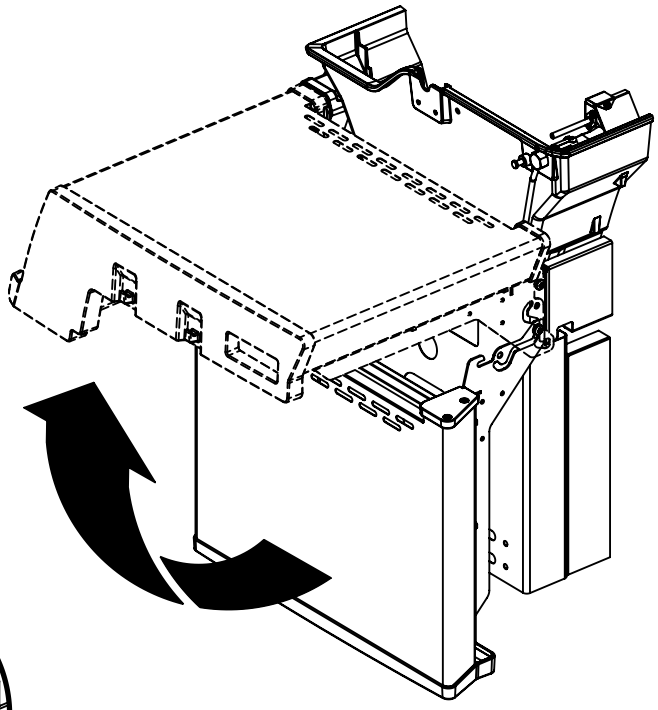

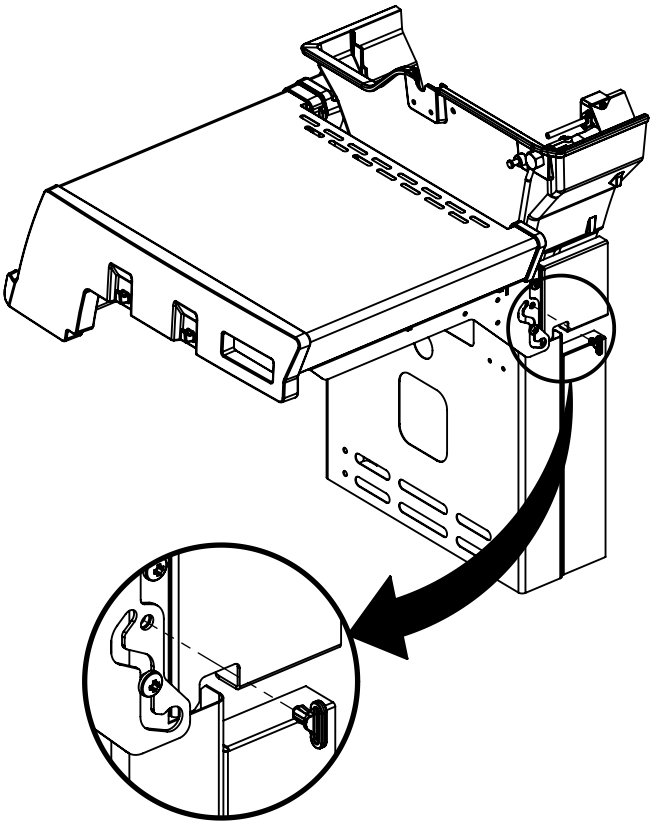

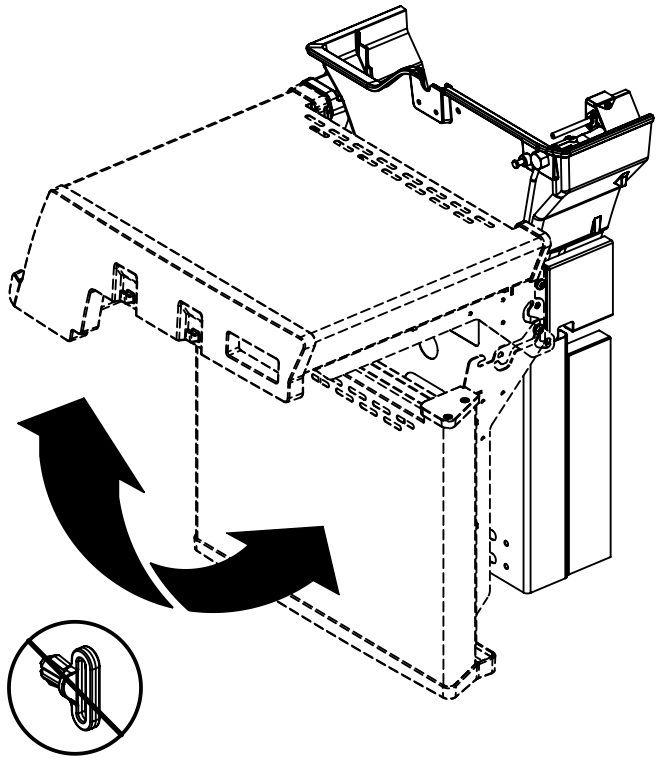

11 (1)

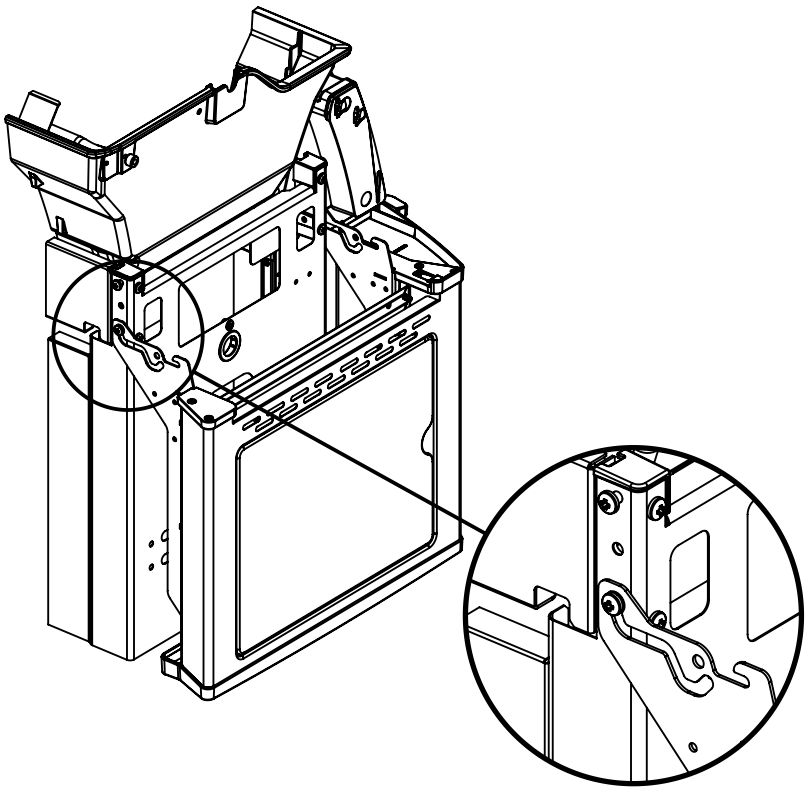

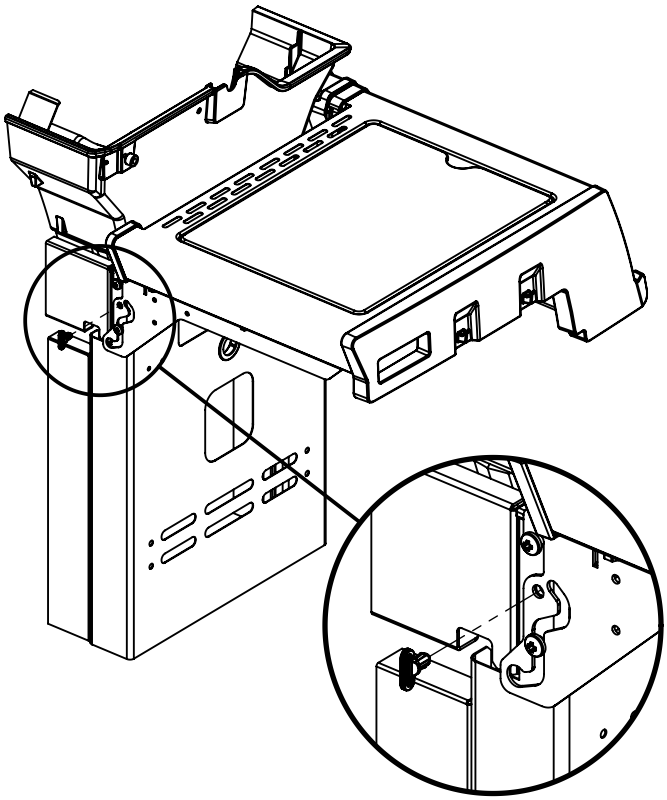

12 (1)

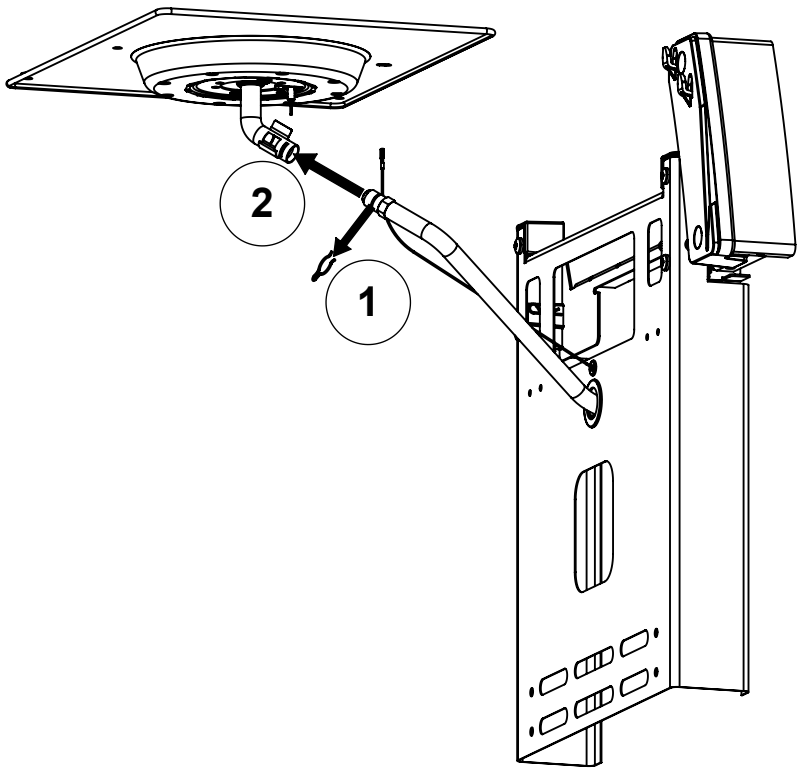

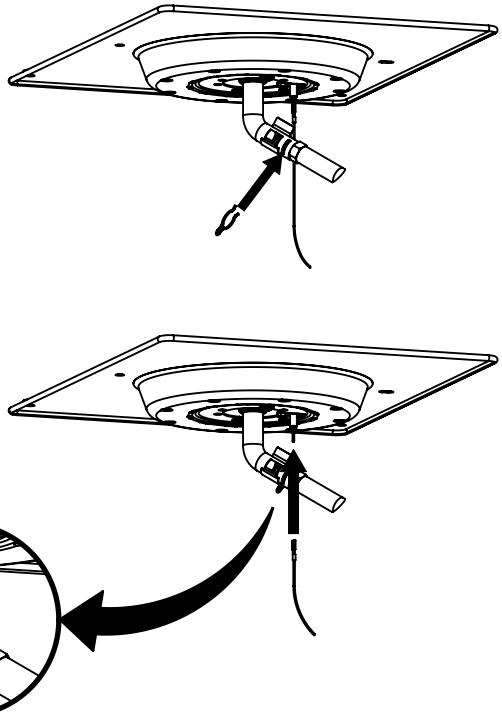

13

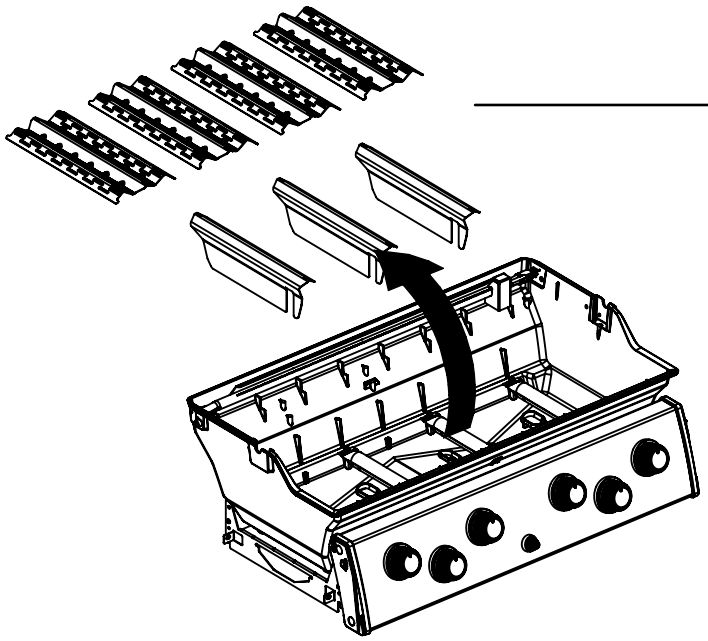

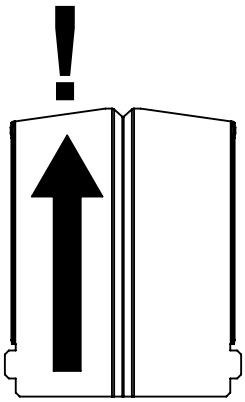

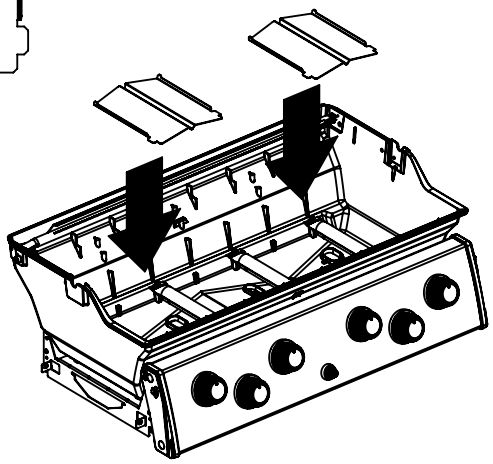

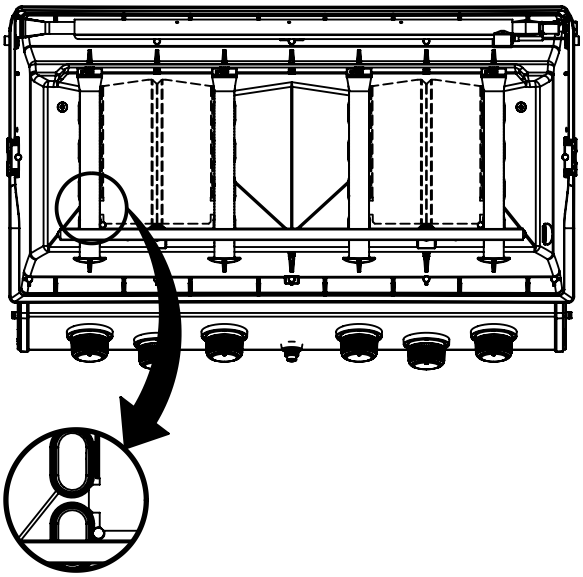

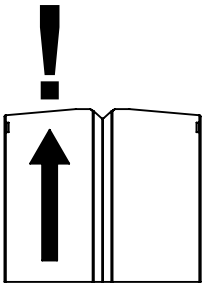

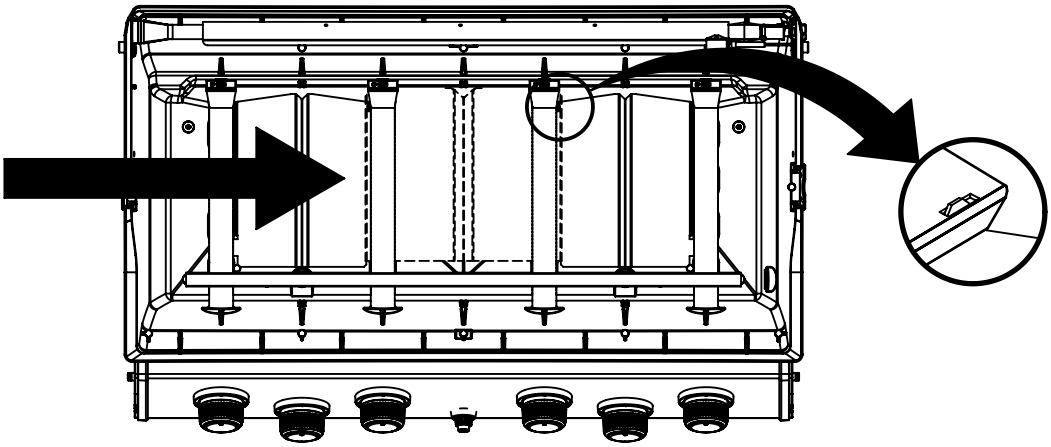

14	(2)	(2)	(2)	(2)

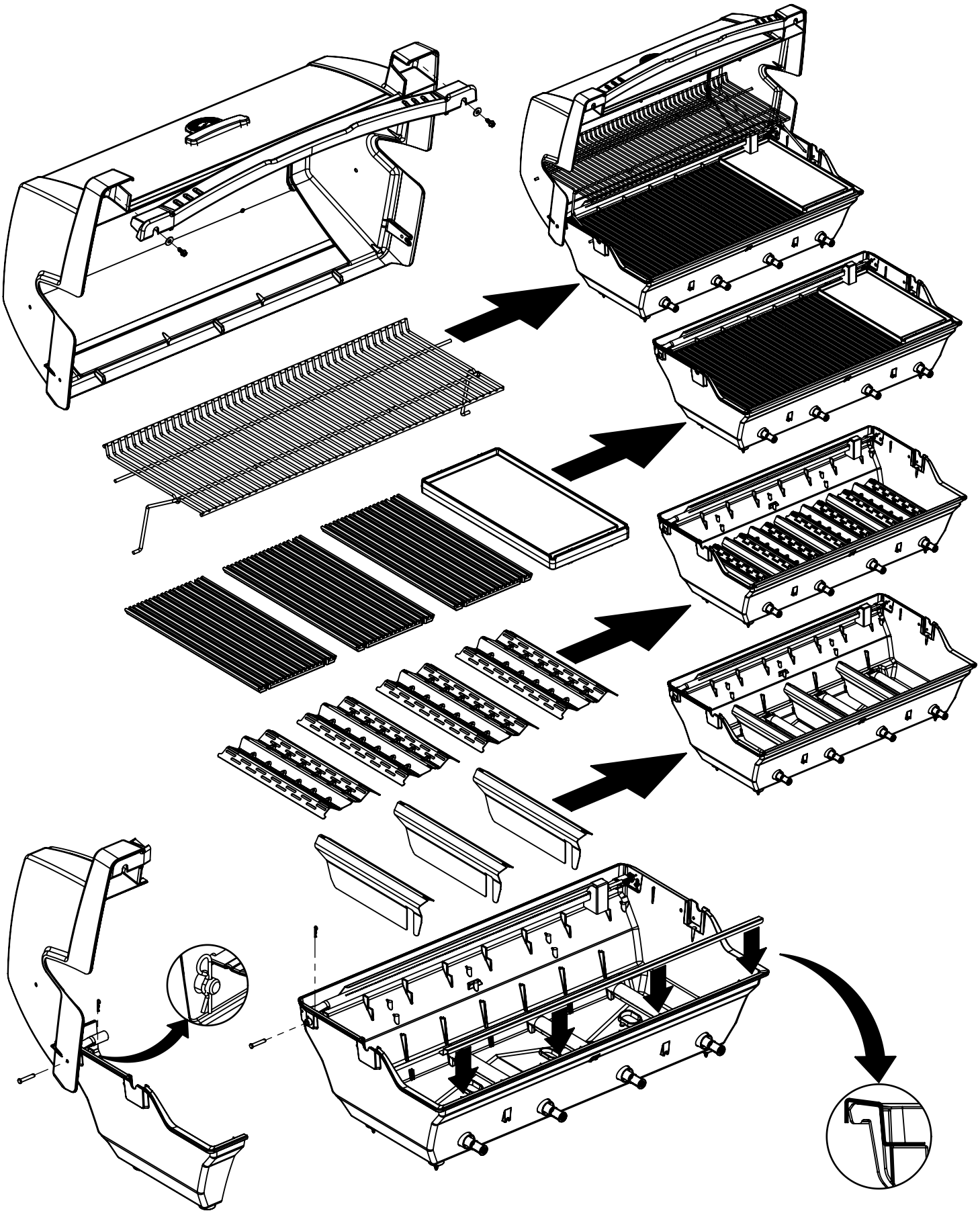

15	

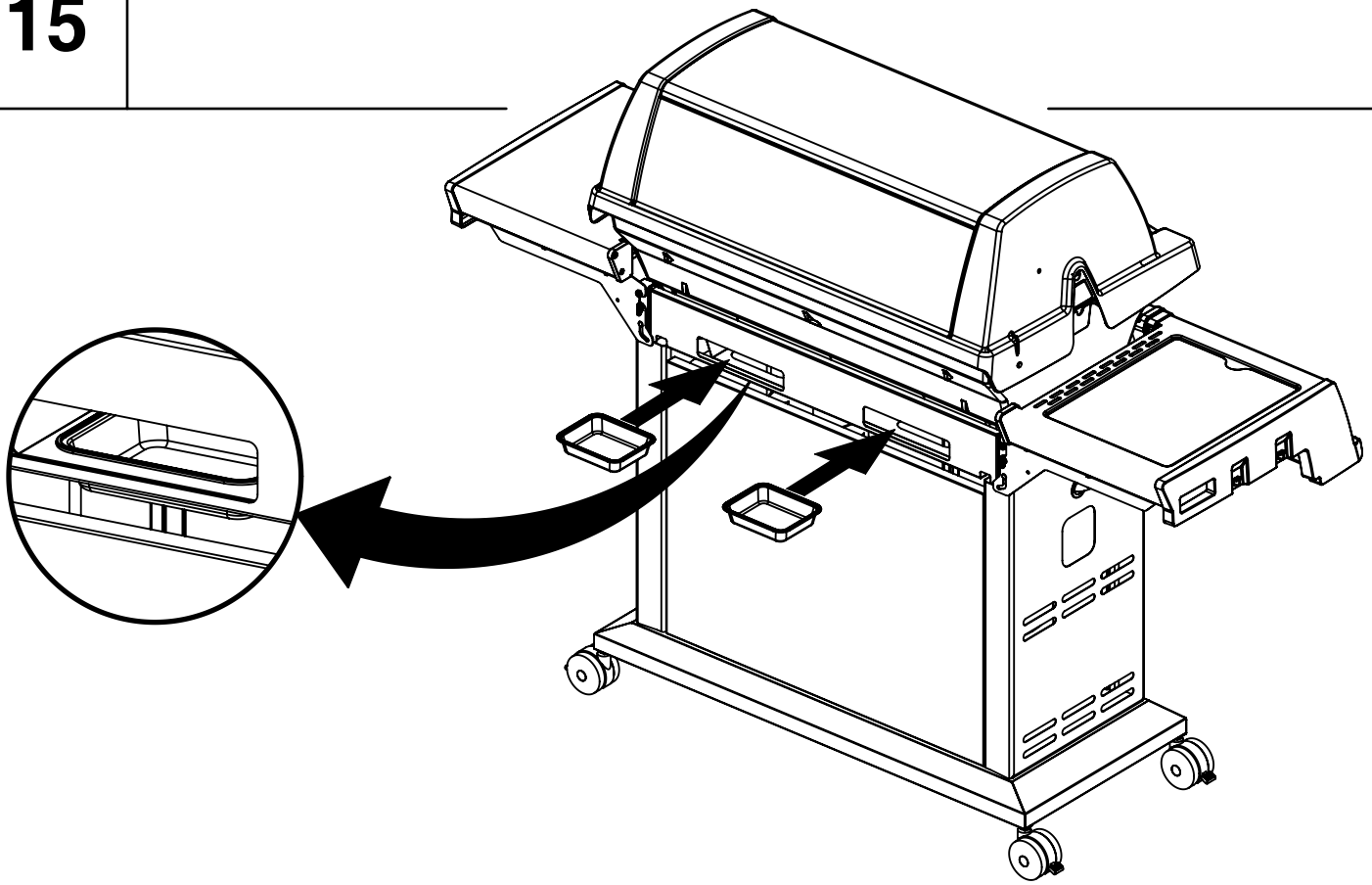

16	

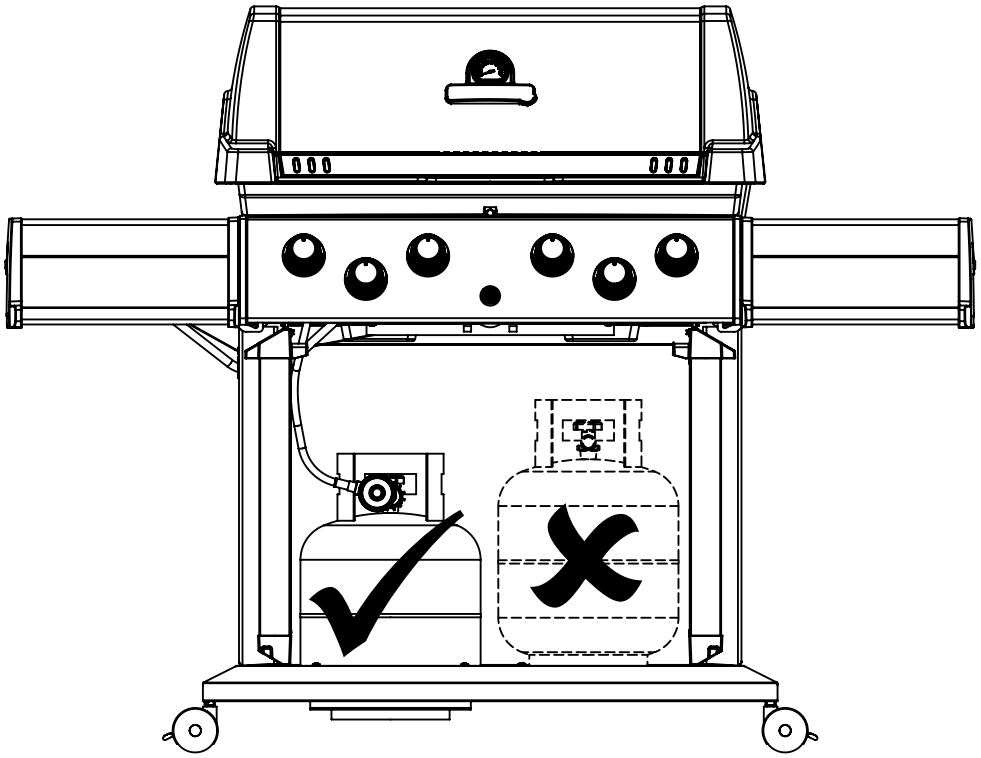

17	

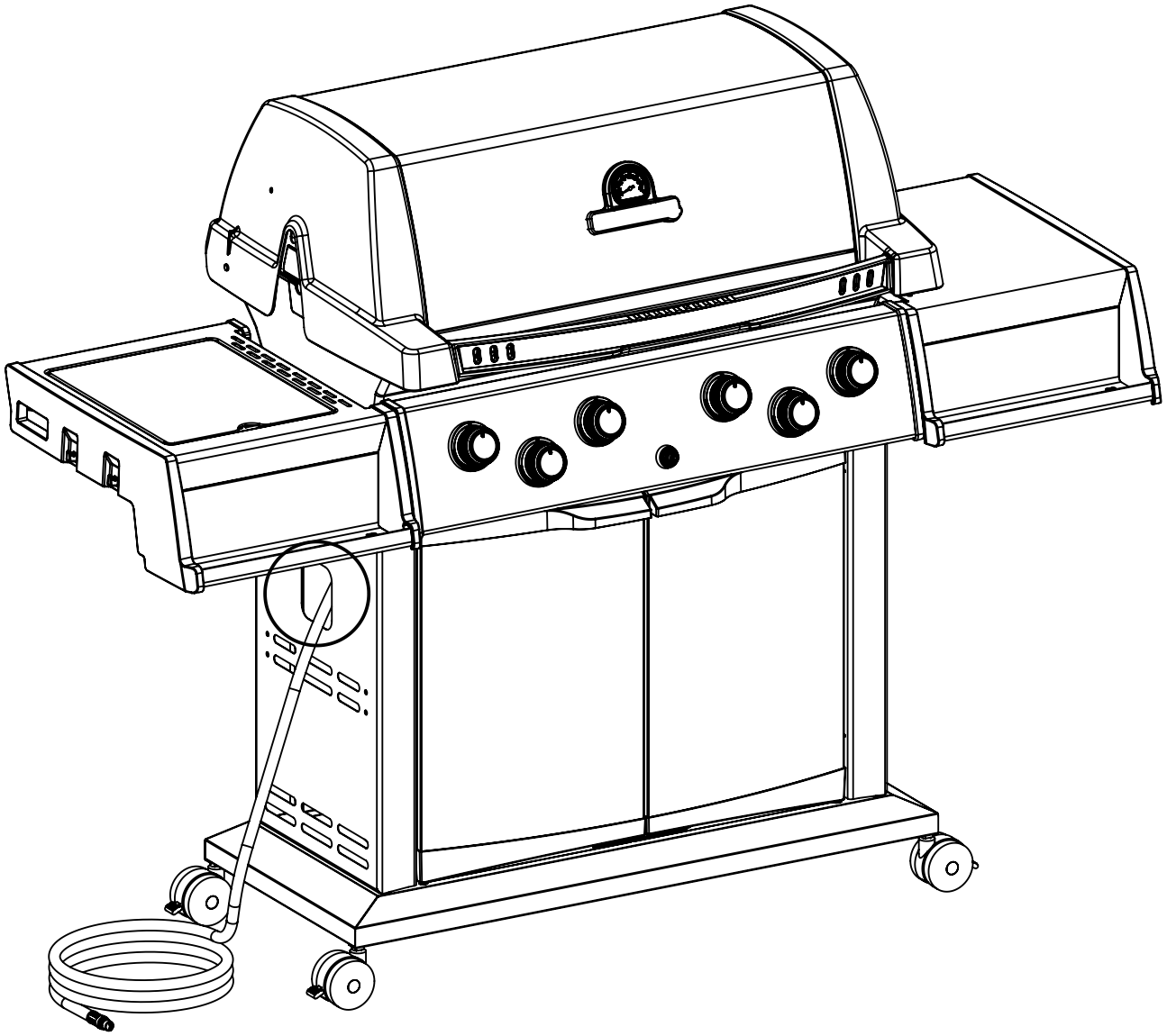

18	(2) 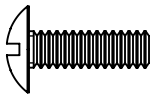 (2)

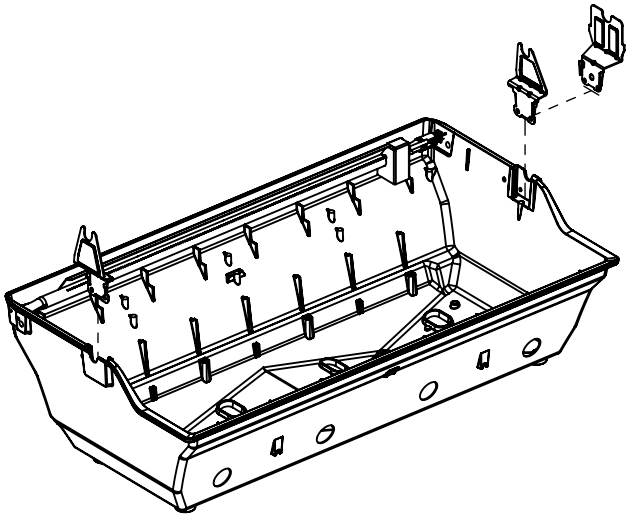

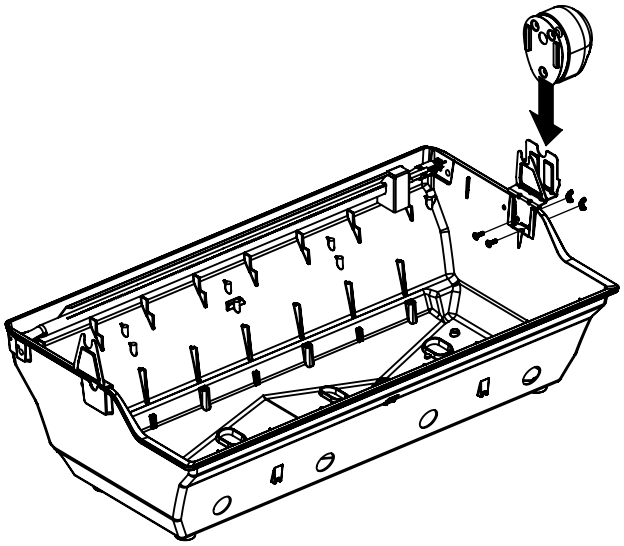

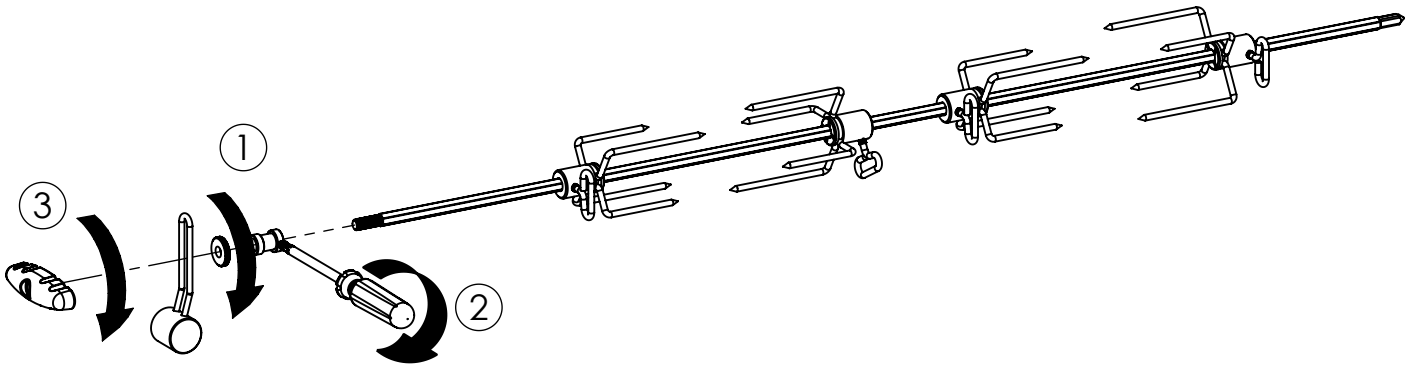

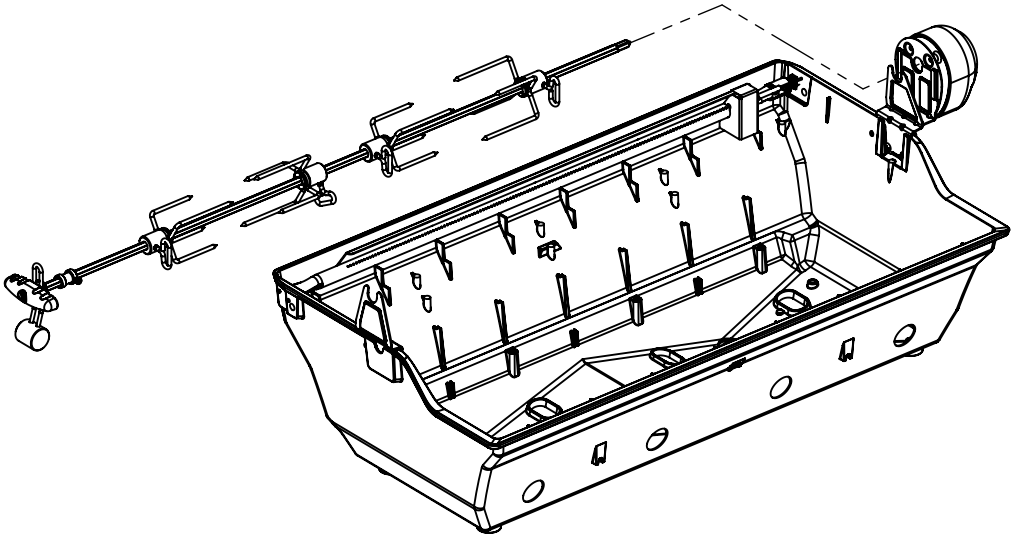

PARTS LIST / LISTE DES PIECES

KEY #	ITEM #	DESCRIPTION	9889-82	9889-83	9889-86
1	10909-E600	CASTING BOTTOM	1	1	1
2	10473-E600	CASTING TOP	1	1	1
3	10081-BK630	NAMEPLATE	1	1	1
4	10958-E600	TOP CASTING INSERT	1	1	1
5	10571-6	HEAT INDICATOR	1	1	1
6	10240-15	HINGE PIN	2	2	2
6A	S21237	HINGE SPACER	2	2	2
7	S21233	HITCH PIN CLIP	2	2	2
8	10225-T556	GRIDDLE	1	1	1
9	10225-T536	GRID - CAST IRON	4	4	4
10	10222-E400	FLAV-R-WAVE	4	4	4
11	10225-E601	GRID - WARMING RACK	1	1	1
12	10222-E401	DIVIDER	3	3	3
13	10184-R86	BOSS EXTENSION	1	1	1
15	10390-E20	BURNER	4	4	4
17	10342-247	ELECTRONIC IGNITOR	1	1	1
18	10342-E13	ELECTRODE	2	2	2
19	10342-E600	COLLECTOR BOX	1	1	1
19A	10342-E601	COLLECTOR BOX	1	1	1
21	10444-E669D	CONTROL ASSEMBLY	1	•	•
	10444-E669E	CONTROL ASSEMBLY	•	1	•
	10444-E679E	CONTROL ASSEMBLY	•	•	1
21A	S13470-073	HOSE-SIDE BURNER	1	•	•
	S13470-079	HOSE-SIDE BURNER	•	1	•
	S13470-109	HOSE-SIDE BURNER	•	•	1
21B	Y-11230	COTTER PIN	1	1	1
21C	10110-45	TUBE-REAR BURNER ASSY	1	1	1
23	22001-768	CONTROL KNOB	6	6	6
23A	10472-E38	CONTROL BEZEL	6	6	6
25	10222-E403	BAFFLE	2	2	2
26	10222-E404	BAFFLE	1	1	1
30	10194-E633	CONTROL COVER	•	•	•
	10194-E699	CONTROL COVER	1	1	1
31	10711-E42A	EDGE CAP - CONTROL COVER	1	1	1
32	10711-E41A	EDGE CAP - CONTROL COVER	1	1	1
33	10184-E85	RADIATION SHIELD	1	1	1
35	10184-E501	SUPPORT-CASTING-LEFT	1	1	1
36	10184-E511	SUPPORT-CASTING-RIGHT	1	1	1
37	10184-E651	SUPPORT-SIDE SHELF-LEFT	2	2	2
37A	10184-E63	SUPPORT-SIDE SHELF-LEFT	2	2	2
38	10184-E641	SUPPORT-SIDE SHELF-RIGHT	2	2	2
38A	10184-E62	SUPPORT-SIDE SHELF-RIGHT	2	2	2
39	10956-E661	BRACE-REAR	1	1	1
40	10711-E701	BASE	1	1	•
	10711-E711	BASE	•	•	1
40A	10184-D821	TANK RETAINER	1	1	1
41	10956-E691	BRACE-FRONT	1	1	1
42	10958-E89	DOOR	2	2	2
42A	10958-E951	DOOR – INNER	2	2	2
43	10958-E761	SIDE PANEL	2	2	2
44	10958-E921	PANEL - REAR	1	1	1
45	10184-E821	BRACKET - DOOR CATCH	1	1	1
48	10184-E681	BRACKET - SHELF	2	2	2
49	10711-E84	CONDIMENT BIN	2	2	2
50	10711-E92	SHELF - SIDE	1	1	1
51	10711-E93	SHELF-SIDEBURNER	1	1	1
52	10184-E88A	DOOR - TOP CAP - LEFT	1	1	1
53	10184-E86	DOOR - BOTTOM CAP - LEFT	1	1	1
54	10184-E89A	DOOR - TOP CAP - RIGHT	1	1	1
55	10184-E87	DOOR - BOTTOM CAP - RIGHT	1	1	1
58	10711-E721	SHELF - CABINET	1	1	1

PARTS LIST / LISTE DES PIECES

KEY #	ITEM #	DESCRIPTION	9889-82	9889-83	9889-86
60	10711-E47	END CAP - SHELF - RIGHT	1	1	1
61	10711-E44	EDGE CAP - SHELF - RIGHT REAR	1	1	1
62	10711-E45	EDGE CAP - SHELF - RIGHT FRONT	1	1	1
63	10711-E48	END CAP - SHELF - LEFT	1	1	1
64	10711-E43	EDGE CAP - SHELF - LEFT REAR	1	1	1
65	10711-E46	EDGE CAP - SHELF - LEFT FRONT	1	1	1
66	S13016A	BURNER ROTISSERIE	1	1	1
68	S21362	SPRING	1	1	1
70	Y-11990	HEX NUT	1	1	1
71	10696-095	REARBURNER-ORIFICE	1	•	•
	10696-111	REARBURNER-ORIFICE	•	1	•
	10696-170	REARBURNER-ORIFICE	•	•	1
74	S21084	SCREW - #14 x 3/4	14	14	14
75	10338-600	HANDLE	1	1	1
75A	10184-E713C	STRAP - HANDLE	1	1	1
76	S21255	WASHER	4	4	4
78	10892-22	CASTOR	4	4	4
79	Y-11561	BOLT – 1/4:20 x 1 3/4	8	8	8
80	Y-11546	SCREW- 1/4-20 X 5/8	8	8	8
81	Y-12860	SCREW – 1/4-20 X 1 3/8	8	8	8
82	Y-12673	SHELF - LOCK PIN	2	2	2
83	Y-12310	BOLT- 1/4-20 X 3/4	4	4	4
87	Y-11793	NUT- 1/4-20	22	22	18
88	Y-12865	SCREW 1/4-20 X 1/2	10	10	6
89	Y-11211	WASHER	6	6	6
96	S21125	SCREW – 8 X 1/2	12	12	12
98	S21124	SCREW – 8 X 1/2	36	36	36
98A	Y-12643	SCREW – 8 X 1/2	16	16	16
99	Y-12646	SCREW – SHOULDER 8 X 1/2	2	2	2
104	Y-12835	SCREW – 6-32 X 1/4	3	3	3
110	23009-98	GRID	1	1	1
111	10390-R81A	SIDE BURNER	1	1	1
113	10342-T18	ELECTRODE – SIDE BURNER	1	1	1
114	23000-254	COVER-SIDE BURNER	1	1	1
117	23000-271	SHELF-SIDE BURNER	1	1	1
122	10184-E582	BRACKET – CASTOR SUPPORT	2	2	2
123	S15115	GREASE PAN - DISPOSABLE	2	2	2
125	Y-12220	BUSHING	1	1	1
135	Y-12119	3/8 HEYCO BUSHING	3	3	3
136	10184-E43	ROTISSERIE SHIELD	1	1	1
137	10184-E42	ROTISSERIE BRACKET	1	1	1
138	10184-E44	ROTISSERIE SHIELD	1	1	1
139	S21061	WING NUT	2	2	2
140	Y-29306	BOLT - 10-24 x 5/8	2	2	2
141	S15271	ROTISSERIE HANDLE	1	1	1
142	S15270	ROTISSERIE COUNTER WEIGHT	1	1	1
143	S15263	ROTISSERIE BUSHING	1	1	1
144	S15287	ROTISSERIE FORKS	2	2	2
145	S15258	SPIT ROD	1	1	1
146	S15242	ROTISSERIE MOTOR	1	1	1
147	S15299	ROTISSERIE WASHER	1	1	1
155	Y-12125	DOOR PIN CAP	2	2	2

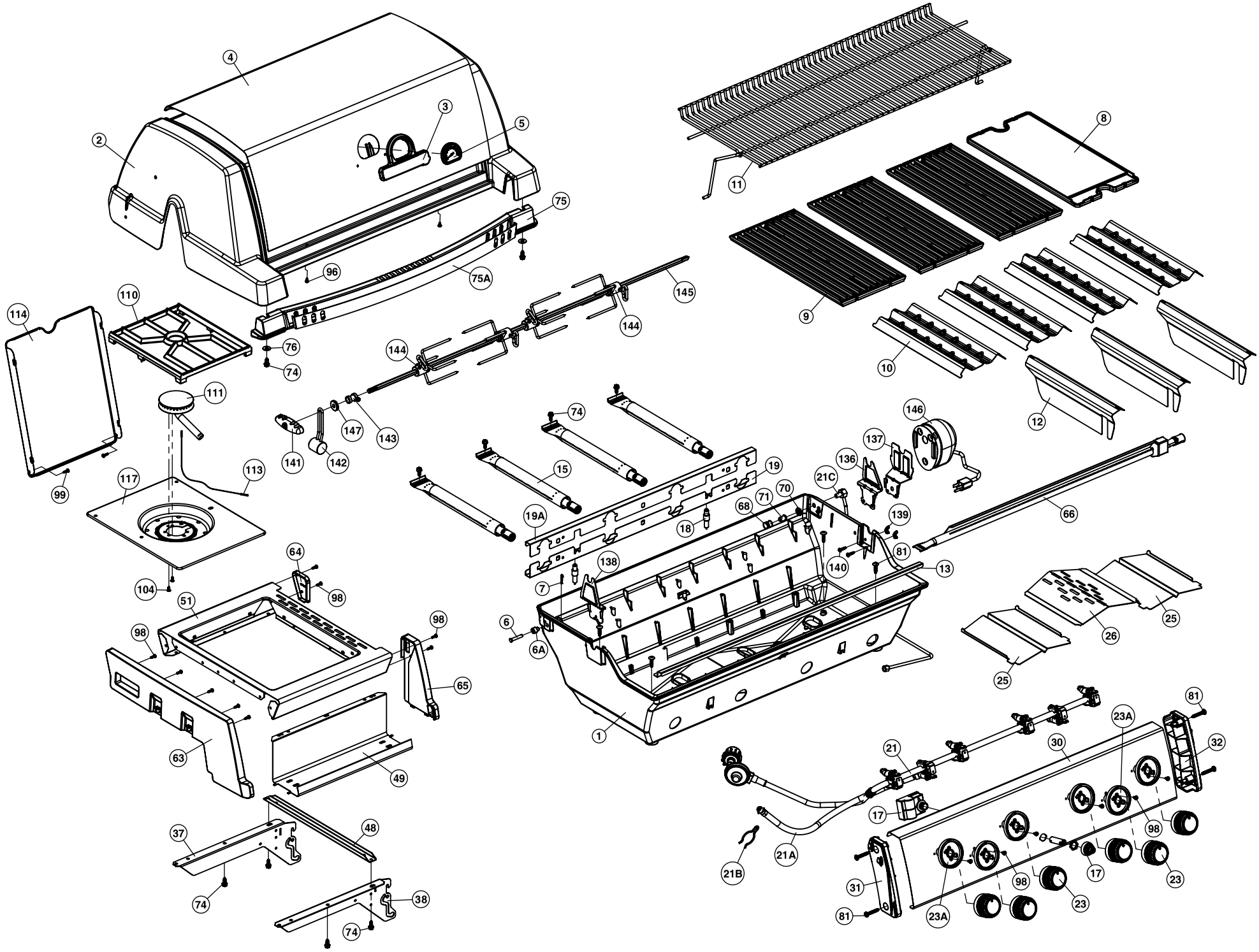
1
2
3
4
5
6
6A
7
8
9
10
11
12
13
15
18
19
19A
21
21A
21B
21C
23
23A
25
26
30
31
32
37
38
48
49
51
63
64
65
66
68
70
71
74
75
75A
76
81
96
98
99
104
110
111
113
114
117
136
137
138
139
140
141
142
143
144
145
146
147

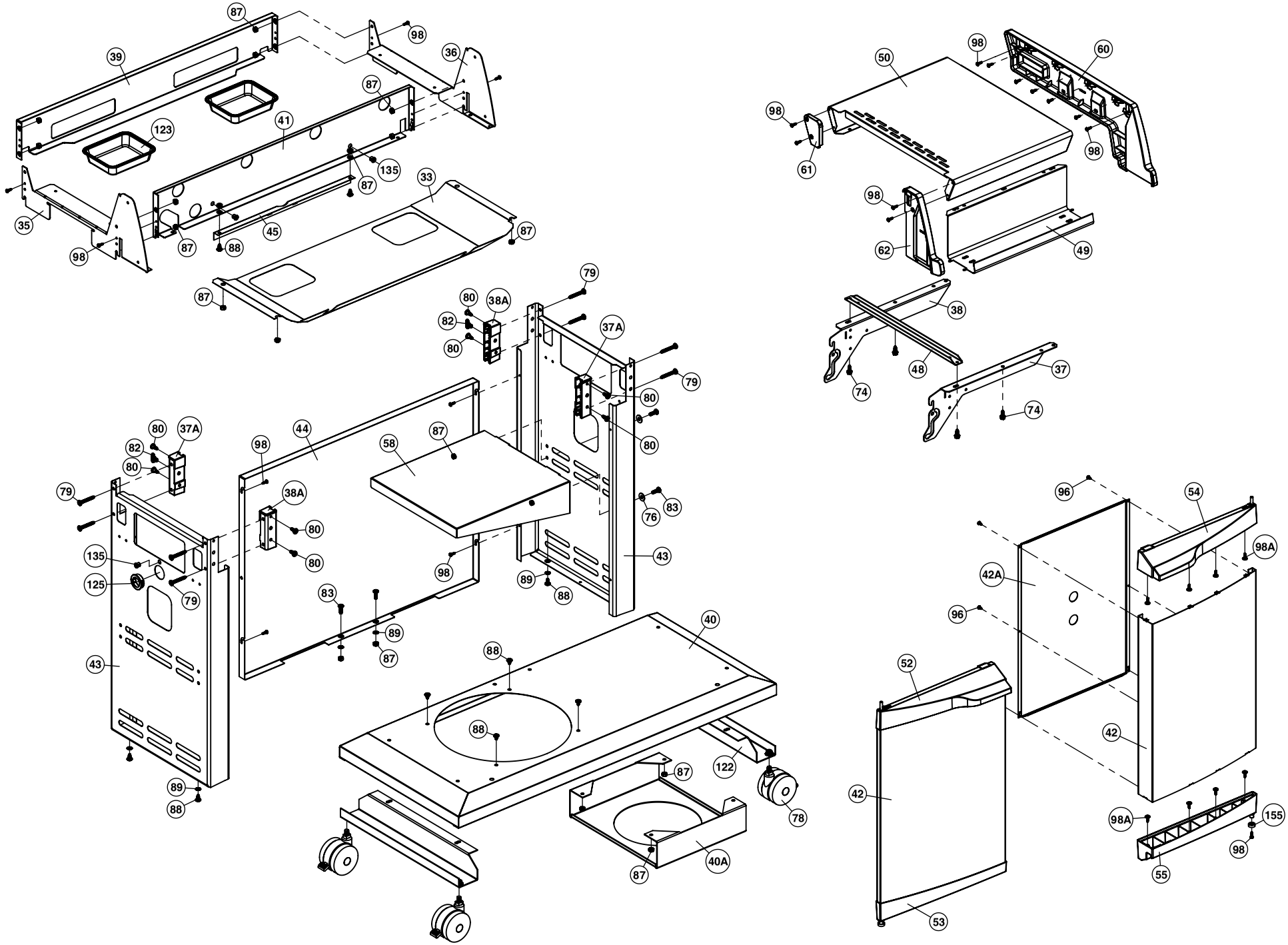
87
98
39
36
87
123
41
135
87
33
35
45
87
98
87
88
87
79
80
38A
82
80
37A
79
80
80
44
58
87
80
37A
82
80
98
38A
79
80
80
76
83
135
125
79
98
43
89
88
83
89
87
43
40
88
88
122
87
78
89
88
87
40A
98
60
50
98
61
98
98
62
49
38
48
37
74
74
96
54
98A
42A
96
52
42
42
98A
155
98
55
53